Changes for the Better

MITSUBISHI ELECTRIC

HOME REFRIGERATORS

SERVICE MANUAL

2011

NO.SM-RE-1130

Models MR-385C-W-A
MR-385C-ST-A
MR-385CL-W-A
MR-385CL-ST-A
MR-420C-W-A
MR-420C-ST-A
MR-455C-W-A
MR-455C-ST-A

CONTENTS

1. SPECIFICATIONS..... 1
2. OUTLINES AND DIMENSIONS..... 7
3. WIRING DIAGRAM..... 10
4. REFRIGERANT CIRCUIT..... 11
5. NAMES OF THE PARTS..... 13
6. TROUBLE SHOOTING..... 14
   6.1 TROUBLE CRITERION OF MAIN PARTS.....14
   6.2 FUNCTION OF OPERATION PANEL.....16
   6.3 FLOW CHART OF SELF-CHECK.....17
   6.4 TEST POINT DIAGRAM OF MAIN CONTROL BOARD..... 18
7. DISASSEMBLY INSTRUCTIONS..... 19
8. PARTS LIST..... 22

A.....Australia & New Zea land

1 SPECIFICATIONS

1.1 SPECIFICATIONS

MR-385C-A

MR-385CL-A

Power supply			230/240V 50Hz
Total capacity (Gross (AS))		L	385 (F : 130 R : 255)
Dimensions (HXWXD)		mm.	1587 x 687 x 694
Cabinet			Acrylic resin coated steel
Food liner			ABS resin
Insulation	Cabinet		Foamed cyclopentane
	Freezer door		Foamed cyclopentane
	Refrigerator door		Foamed cyclopentane
Cooling system	Freezer		Forced air convection
	Refrigerator		Surround cooling,multi air flow,front air flow
Evaporator			Fin and tube type
Condenser			Concealed type
Defrost system			Automatic (Heater defrost)
Drain			Automatic (drainage)
Temperature control system			Automatic control
Refrigerator room light			240V 15W (E12)
Accessories	Ice tray		1 pc.
	Ice box		1 pc.
	Freezer pocket		2 pcs.
	Slide chilled case		1 pc.
	Crystal shelf (F)		1 pc.
	Glass shelf (R)		3 pcs.
	Free pocket		1 pc.
	Egg rack		2 pcs.
	Adjust pocket		2 pcs.
	Bottle pocket		2 pcs.
	Vegetable case		1 pc.
	Tray V		1 pc.
	Drain pan		1 pc.
	Bottle stopper		1 pc.
Weight	Unit	kg	68
	Shipping	kg	74

MR-420C-A

Power supply			230/240V 50Hz
Total capacity (Gross (AS))		L	420 (F : 130 R : 290)
Dimensions (HXWXD)		mm.	1692 x 687 x 694
Cabinet			Acrylic resin coated steel
Food liner			ABS resin
Insulation	Cabinet		Foamed cyclopentane
	Freezer door		Foamed cyclopentane
	Refrigerator door		Foamed cyclopentane
Cooling system	Freezer		Forced air convection
	Refrigerator		Surround cooling,multi air flow,front air flow
Evaporator			Fin and tube type
Condenser			Concealed type
Defrost system			Automatic (Heater defrost)
Drain			Automatic (drainage)
Temperature control system			Automatic control
Refrigerator room light			240V 15W (E12)
Accessories	Ice tray		1 pc.
	Ice box		1 pc.
	Freezer pocket		2 pcs.
	Slide chilled case		1 pc.
	Crystal shelf (F)		1 pc.
	Glass shelf (R)		3 pcs.
	Free pocket		1 pc.
	Egg rack		2 pcs.
	Adjust pocket		2 pcs.
	Bottle pocket		2 pcs.
	Vegetable case		1 pc.
	Tray V		1 pc.
	Drain pan		1 pc.
	Bottle stopper		1 pc.
Weight	Unit	kg	73
	Shipping	kg	78

MR-455C-A

Power supply			230/240V 50Hz
Total capacity (Gross (AS))		L	454 (F : 130 R : 324)
Dimensions (HXWXD)		mm.	1802 x 687 x 694
Cabinet			Acrylic resin coated steel
Food liner			ABS resin
Insulation	Cabinet		Foamed cyclopentane
	Freezer door		Foamed cyclopentane
	Refrigerator door		Foamed cyclopentane
Cooling system	Freezer		Forced air convection
	Refrigerator		Surround cooling,multi air flow,front air flow
Evaporator			Fin and tube type
Condenser			Concealed type
Defrost system			Automatic (Heater defrost)
Drain			Automatic (drainage)
Temperature control system			Automatic control
Refrigerator room light			240V 15W (E12)
Accessories	Ice tray		2 pcs.
	Ice box		1 pc.
	Freezer pocket		2 pcs.
	Slide chilled case		1 pc.
	Crystal shelf (F)		1 pc.
	Glass shelf (R)		4 pcs.
	Free pocket		1 pc.
	Egg rack		2 pcs.
	Adjust pocket		3 pcs.
	Bottle pocket		2 pcs.
	Vegetable case		1 pc.
	Tray V		1 pc.
	Drain pan		1 pc.
	Bottle stopper		1 pc.
Weight	Unit	kg	75
	Shipping	kg	83

1.2 ELECTRICAL PARTS SPECIFICATION

MR-385C-A
MR-385CL-A

Compressor	Model		DHS66C10RAW
	Power supply		220/240V 50Hz
	Rated input	W	113/113.5(220/240V 50Hz)
	Starting current	A	7.78/8.55(220/240V 50Hz)
	Rated current	A	0.70/0.64(220/240V 50Hz)
	Winding resistance (A.T. : 20 °C)		18.4 Ω(Main) / 18.5 Ω(Aux)
PTC RELAY			PTH7M330MD2
Motor protector	Model		5TM222NFBYY
	Ambient temperature	°C	25
	Time	Sec.	16 MAX
	Current	A	6.7
Running capacitor			4μF 400VAC
Capillary tube		mm.	∅ 1.8 X ∅ 0.65 X 2350
Dehydrant Molecular sieve		g	10
Refrigerant HFC. 134a		g	170
Defrosting control	Defrosting timer		Control board
	Defrost finish	°C	Thermister 14 ± 1.5
	Thermal fuse	°C	73
Heater	Defrost heater		384 Ω (240V 150W)
Deodorition			Filter
Fan motor	Model		FBA12J12VXC
	Type		DC brushless
	Rate voltage		12V DC
	Input Power	W	4.2 (at Vs 4.3V)
	Revolution	r.p.m	2300 ±10%(at Vs 4.3V)

Temperature control	Model		Freezer		Refrigerator (MM1-6177)	
	Dial position		ON	OFF	OPEN	SHUT
	Warmer	°C	-14.6	-17.6	-	3.5
	Normal	°C	-18.8	-21.8	MAX 5.0	-1.0 ± 1.5
	Colder	°C	-23	-26	-	-12.5

MR-420C-A

Compressor	Model		DHS66C10RAW
	Power supply		220/240V 50Hz
	Rated input	W	113/113.5(220/240V 50Hz)
	Starting current	A	7.78/8.55(220/240V 50Hz)
	Rated current	A	0.70/0.64(220/240V 50Hz)
	Winding resistance (A.T. : 20 °C)		18.4 Ω(Main) / 18.5 Ω(Aux)
PTC RELAY			PTH7M330MD2
Motor protector	Model		5TM222NFBYY
	Ambient temperature	°C	25
	Time	Sec.	16 MAX
	Current	A	6.7
Running capacitor			4μF 400VAC
Capillary tube		mm.	∅ 1.8 X ∅ 0.65 X 2350
Dehydrant Molecular sieve		g	10
Refrigerant HFC. 134a		g	175
Defrosting control	Defrosting timer		Control board
	Defrost finish	°C	Thermister 14 ± 1.5
	Thermal fuse	°C	73
Heater	Defrost heater		384 Ω (240V 150W)
Deodorition			Filter
Fan motor	Model		FBA12J12VXC
	Type		DC brushless
	Rate voltage		12V DC
	Input Power	W	4.2 (at Vs 4.3V)
	Revolution	r.p.m	2300 ±10%(at Vs 4.3V)

Temperature control	Model		Freezer		Refrigerator (MM1-6177)	
	Dial position		ON	OFF	OPEN	SHUT
	Warmer	°C	-14.6	-17.6	-	3.5
	Normal	°C	-18.8	-21.8	MAX 5.0	-1.0 ± 1.5
	Colder	°C	-23	-26	-	-12.5

MR-455C-A

Compressor	Model		DHS66C10RAW
	Power supply		220/240V 50Hz
	Rated input	W	113/113.5(220/240V 50Hz)
	Starting current	A	7.78/8.55(220/240V 50Hz)
	Rated current	A	0.70/0.64(220/240V 50Hz)
	Winding resistance (A.T. : 20 °C)		18.4 Ω(Main) / 18.5 Ω(Aux)
PTC RELAY			PTH7M330MD2
Motor protector	Model		5TM222NFBYY
	Ambient temperature	°C	25
	Time	Sec.	16 MAX
	Current	A	6.7
Running capacitor			4μF 400VAC
Capillary tube		mm.	∅ 1.8 X ∅ 0.65 X 2350
Dehydrant Molecular sieve		g	10
Refrigerant HFC. 134a		g	180
Defrosting control	Defrosting timer		Control board
	Defrost finish	°C	Thermister 14 ± 1.5
	Thermal fuse	°C	73
Heater	Defrost heater		384 Ω (240V, 150W)
Deodorition			Filter
Fan motor	Model		FBA12J12VXC
	Type		DC brushless
	Rate voltage		12V DC
	Input Power	W	4.2 (at Vs 4.3V)
	Revolution	r.p.m	2300 ±10%(at Vs 4.3V)

Temperature control	Model		Freezer		Refrigerator (MM1-6177)	
	Dial position		ON	OFF	OPEN	SHUT
	Warmer	°C	-14.6	-17.6	-	3.5
	Normal	°C	-18.8	-21.8	MAX 5.0	-1.0 ± 1.5
	Colder	°C	-23	-26	-	-12.5

2 OUTLINES AND DIMENSIONS

Unit : mm

MR-385C-A

MR-385CL-A

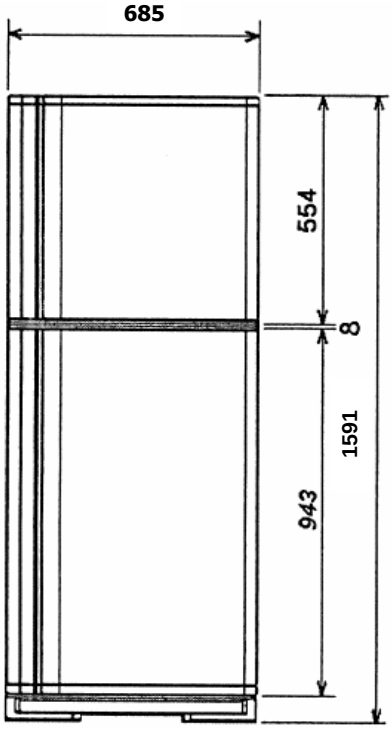

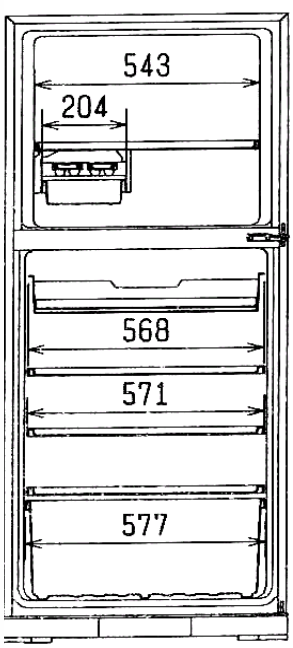

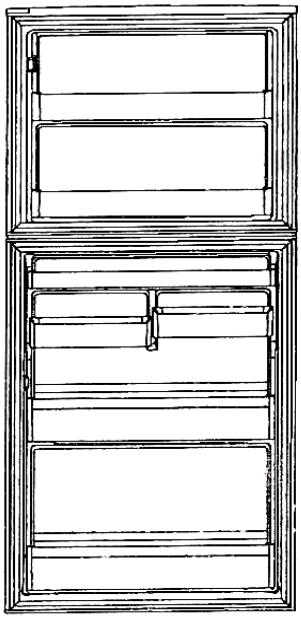

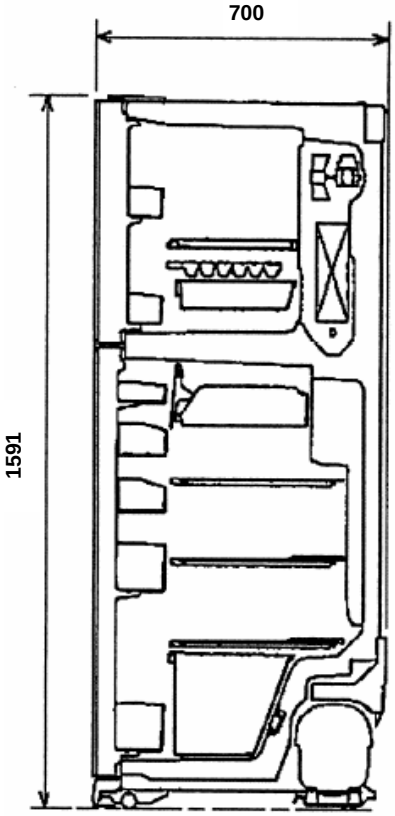

PLUG CORD LENGTH

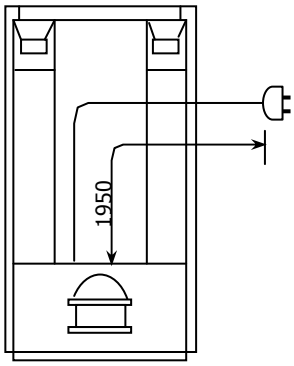

REQUIRED SPACE FOR INSTALLATION

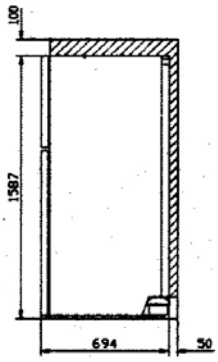

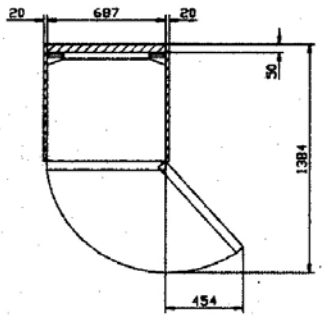

Unit : mm

MR-420C-A

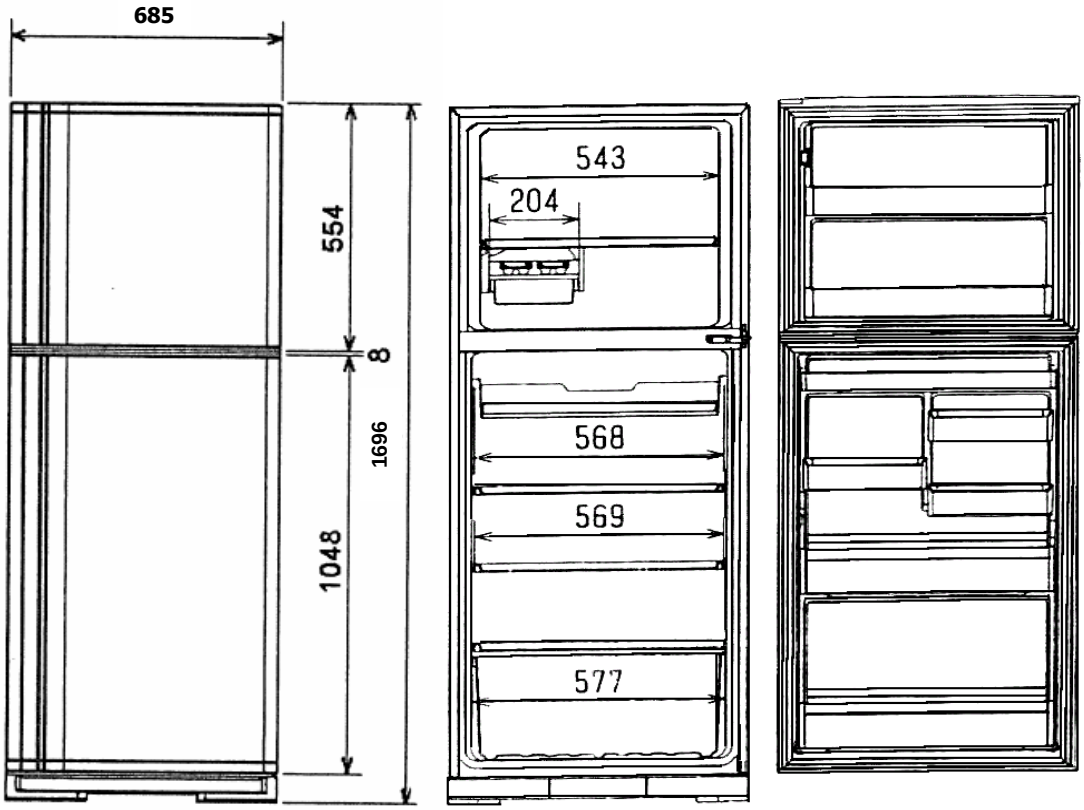

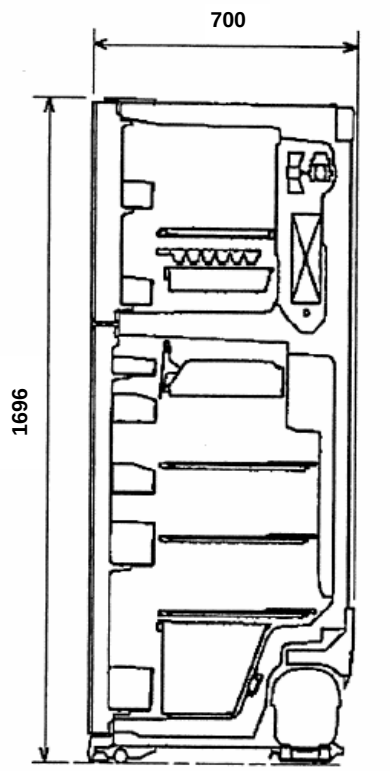

PLUG CORD LENGTH

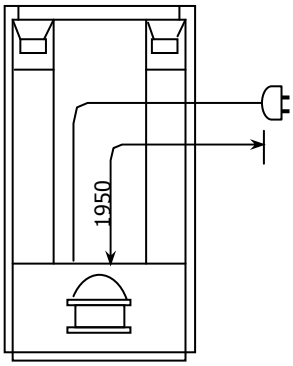

REQUIRED SPACE FOR INSTALLATION

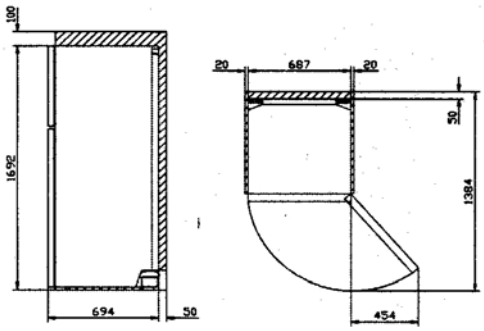

Unit : mm

MR-455C-A

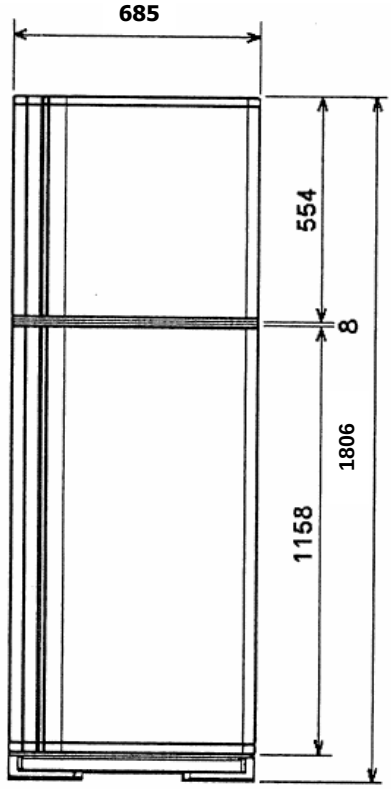

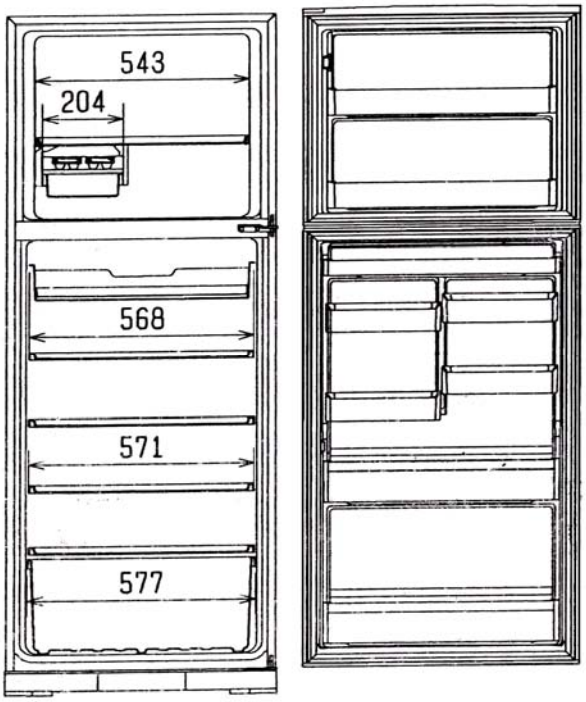

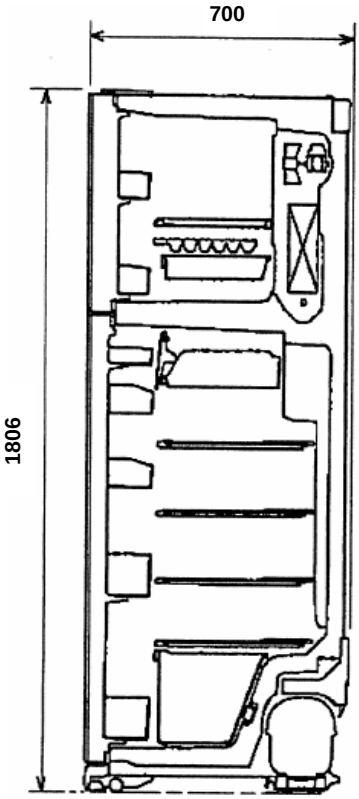

PLUG CORD LENGTH

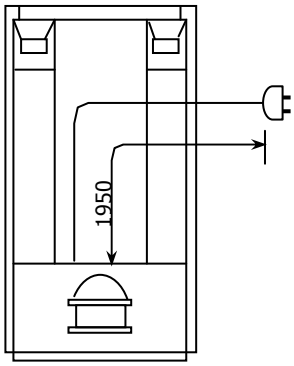

REQUIRED SPACE FOR INSTALLATION

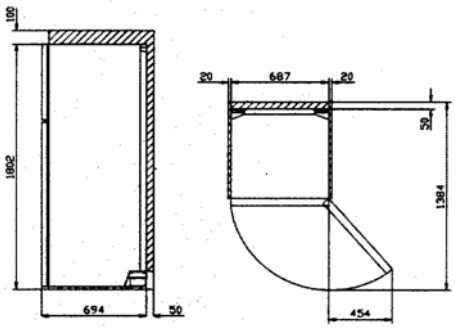

3 WIRING DIAGRAM

(SKELETON WIRING DIAGRAM)

MR-385C-A

MR-385CL-A

MR-420C-A

MR-455C-A

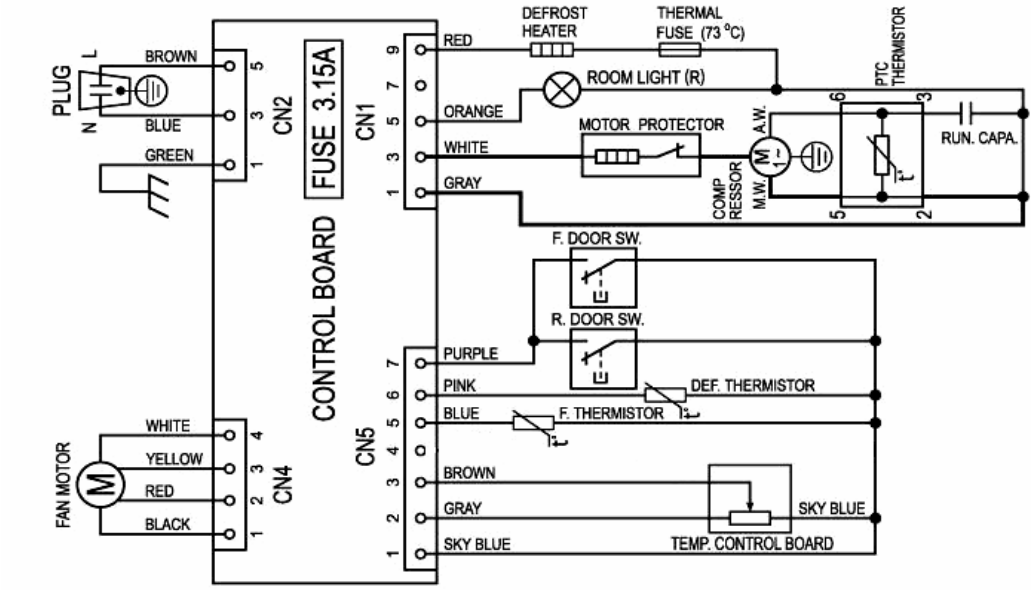

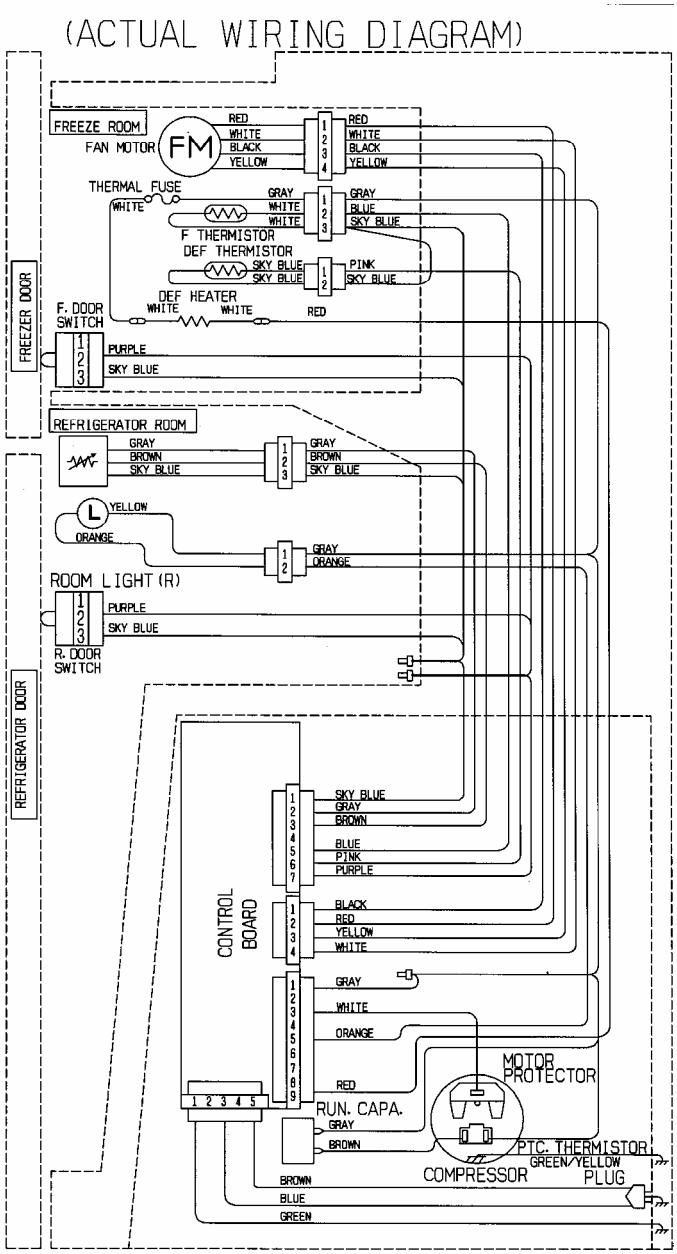

4 REFRIGERANT CIRCUIT

MR-385C-A
MR-385CL-A

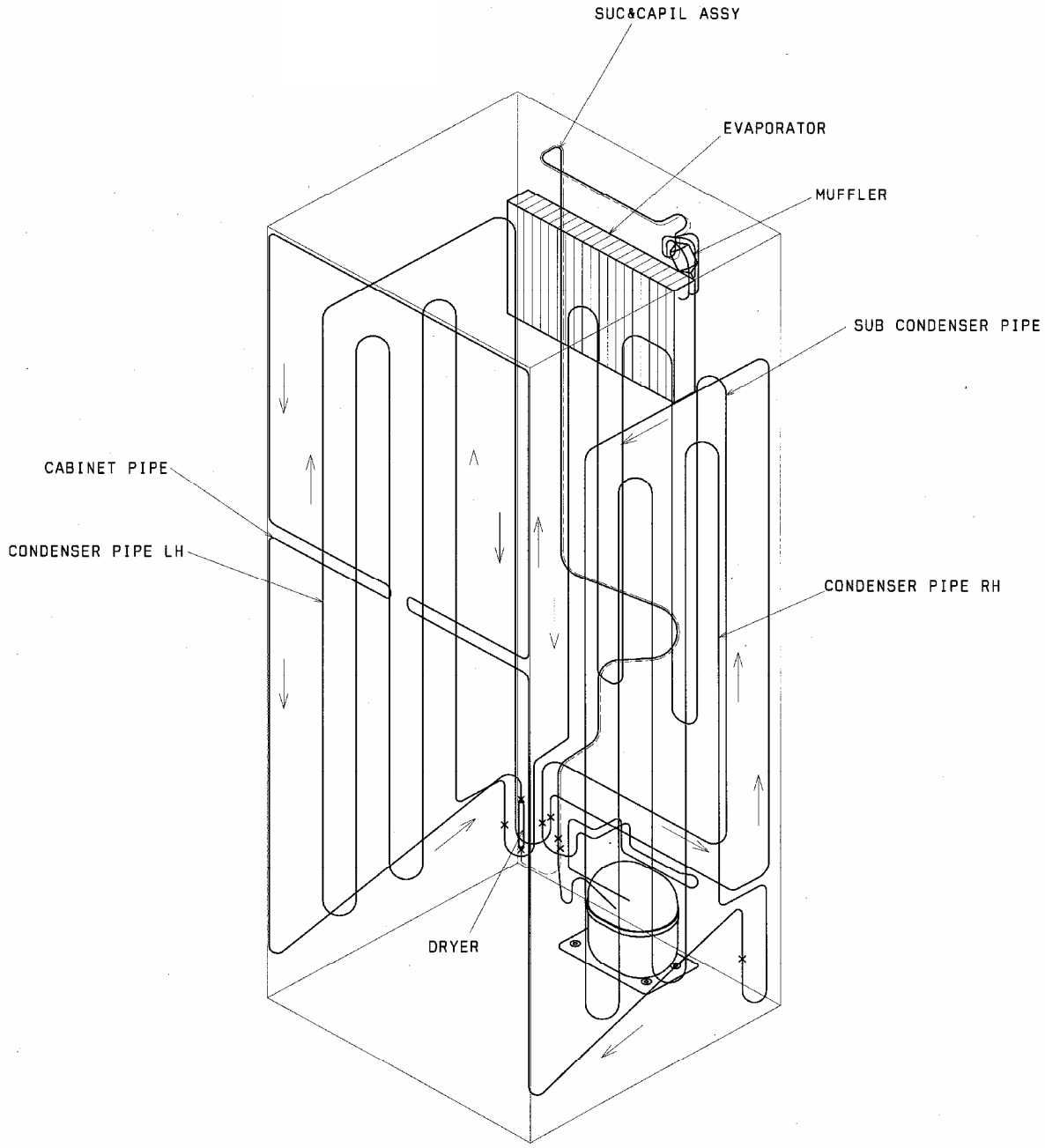

MR-420C-A
MR-455C-A

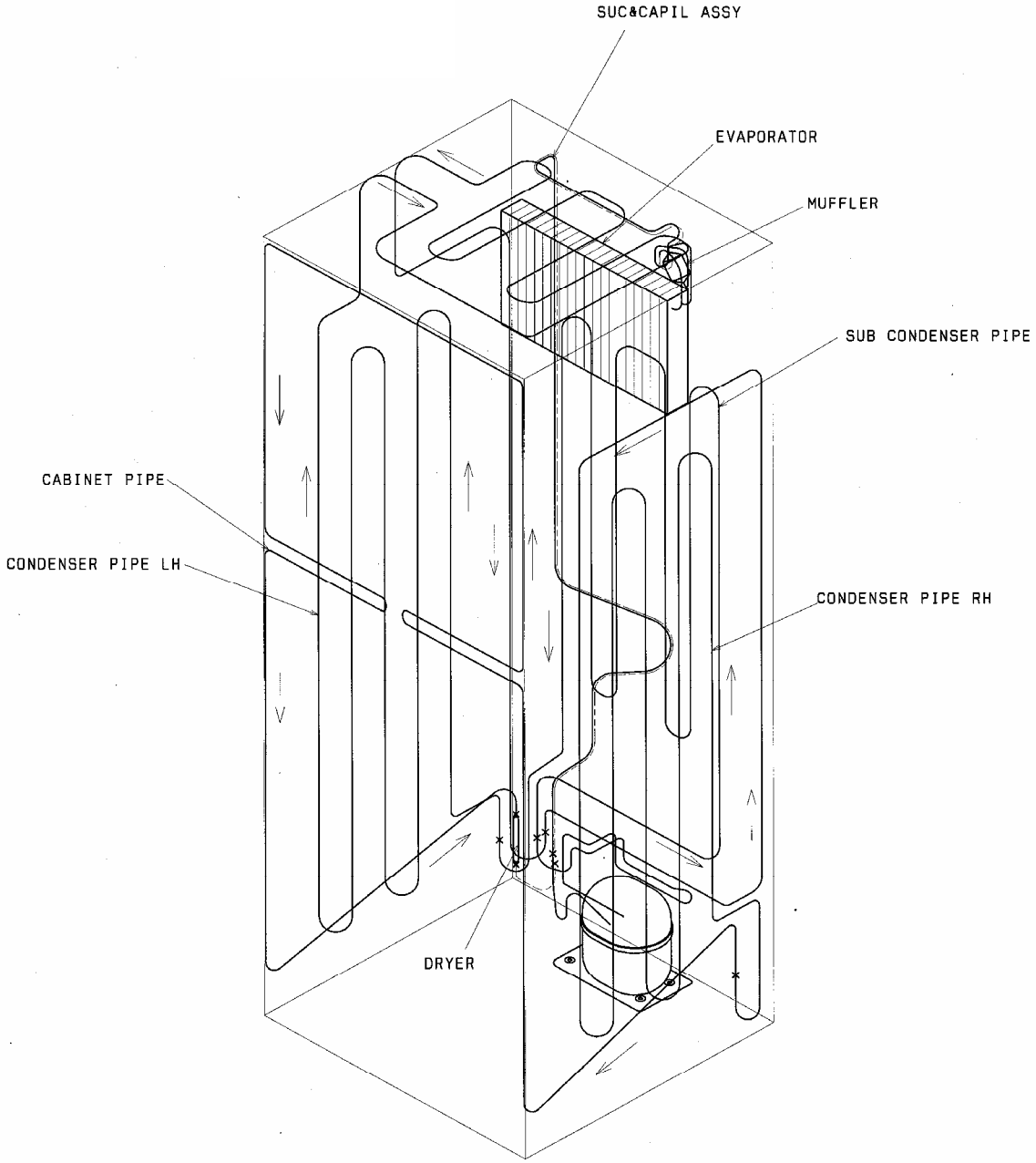

5 NAMES OF PARTS

MR-385C-A **MR-420C-A** **MR-455C-A**

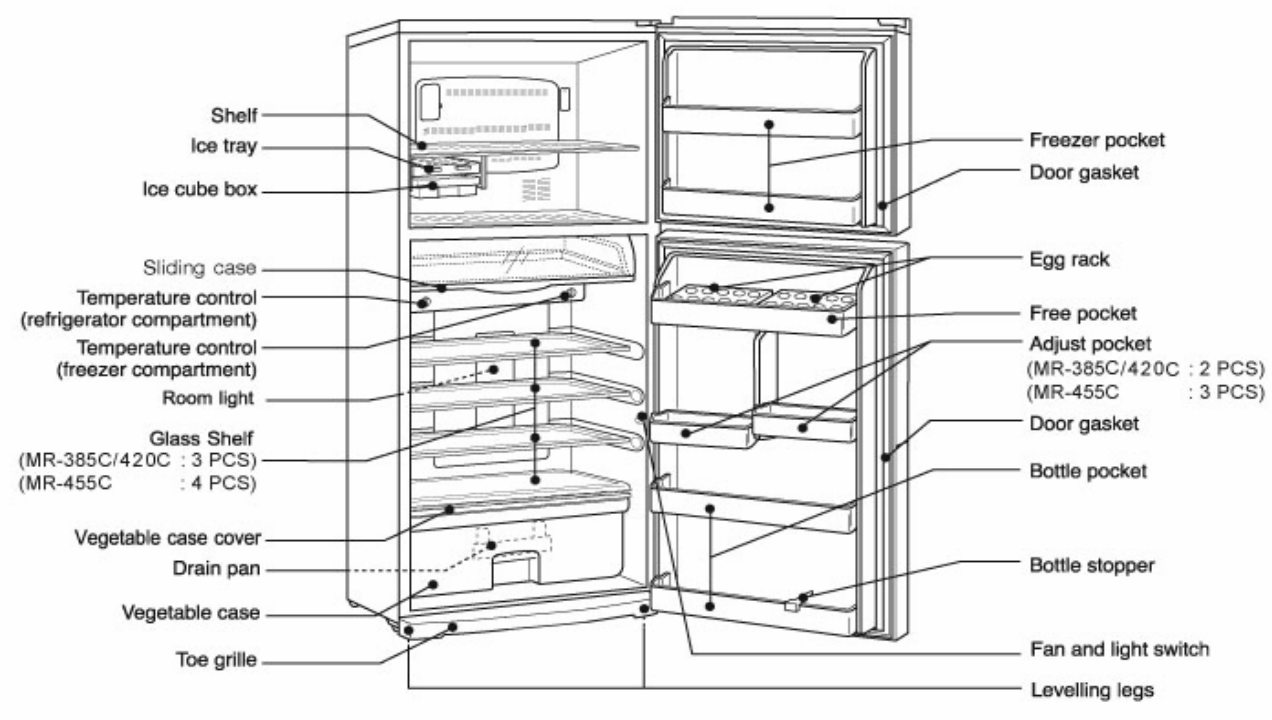

MR-385CL-A

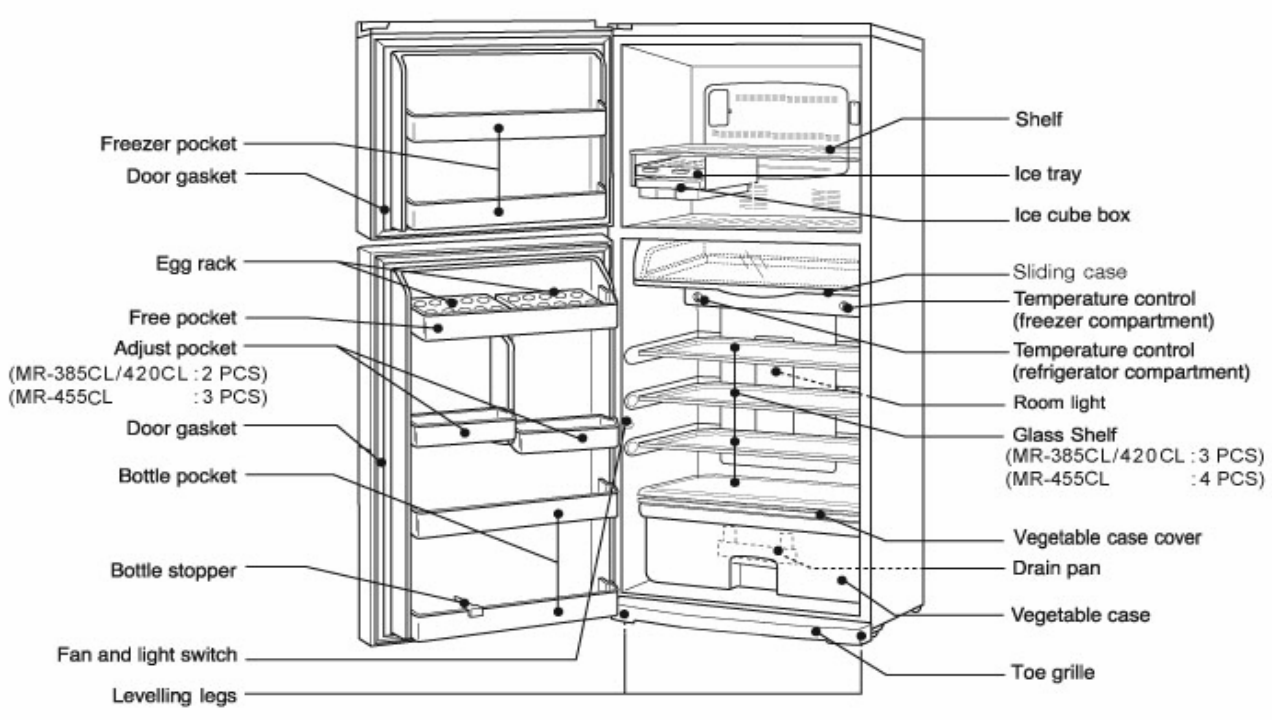

6 TROUBLE SHOOTING

6.1 TROUBLE CRITERION OF MAIN PARTS

MR-385C-A MR-385CL-A MR-420C-A MR-455C-A

<table>
<tr><th>Components/ Part Name</th><th>Check Method and Criterion</th><th>Parts Mounted Position</th></tr>
<tr><td>Compressor</td><td>
<table>
<tr><td>Model</td><td></td><td>DHS66C10RAW</td></tr>
<tr><td>Rated input</td><td>W</td><td>113/113.5(220/240V 50Hz)</td></tr>
<tr><td>Starting current</td><td>A</td><td>7.78/8.55(220/240V 50Hz)</td></tr>
<tr><td>Rated current</td><td>A</td><td>0.70/0.64(220/240V 50Hz)</td></tr>
</table>
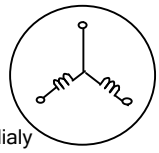

<table>
<tr><th></th><th>Normal</th><th>Abnormal (faulty)</th></tr>
<tr><td>Main wiring</td><td>18.4 Ω (Approx.)</td><td rowspan="2">Opened(∞ Ω) or Short (0Ω)</td></tr>
<tr><td>Auxiliary wiring</td><td>18.5 Ω (Approx.)</td></tr>
</table>
Measure the resistance with a tester.
(Ambient temperature: Room temperature 15°C ~ 25°C)
</td><td>Compressor in the machine chamber at the rear side of the frame</td></tr>
<tr><td>Run capacitor</td><td>
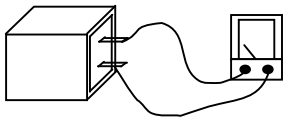
<table>
<tr><td>Rated input</td><td>400VAC</td></tr>
</table>
Measure the resistance with a tester.
<table>
<tr><th>Normal</th><th>Abnormal(faulty)</th></tr>
<tr><td>Opened (∞ Ω)</td><td>Short (0Ω)</td></tr>
</table>
</td><td>In the control panel of the refrigerator compartment</td></tr>
<tr><td>Motor protector</td><td>
<table>
<tr><td>Model</td><td></td><td>5TM222NFBYY</td></tr>
<tr><td rowspan="2">Connected Point</td><td>Open</td><td>120 ± 5° C</td></tr>
<tr><td>Close</td><td>61 ± 9° C</td></tr>
</table>
Measure the resistance with a tester.(Ambient temperature: Room temperature 15°C ~ 25°C)
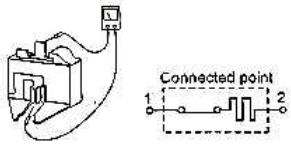

<table>
<tr><th>Normal</th><th>Abnormal(faulty)</th></tr>
<tr><td>Less than 1Ω</td><td>Opened (∞ Ω)</td></tr>
</table>
</td><td>Compressor in the machine chamber at the rear side of the frame</td></tr>
<tr><td>PTC RELAY</td><td>
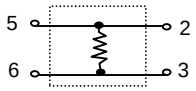

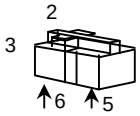

<table>
<tr><td>Model</td><td>PTH7M330MD2</td></tr>
</table>
Measure the resistance with a tester.
(Ambient temperature: Room temperature 15°C ~ 25°C)
<table>
<tr><th>Normal</th><th>Abnormal(faulty)</th></tr>
<tr><td>33 Ω (Approx.)</td><td>Opened (∞ Ω) or Short (0Ω)</td></tr>
</table>
As PTC Relay has been heated while refrigerator is running be sure to measure the resistance after the thermistor has got cool enough.
</td><td>Compressor in the machine chamber at the rear side of the frame</td></tr>
</table>

Components/ Part Name	Check Method and Criterion	Parts Mounted Position
Refrigerator fan motor	<table><tr><td>Model</td><td>FBA12J12VXC</td></tr><tr><td>Type</td><td>DC brushless</td></tr></table> Measure the resistance with a tester.(Ambient temperature:Room temperature 15°C ~ 25°C) <table><tr><th>Normal</th><th>Abnormal (faulty)</th></tr><tr><td>Between 3 - 1 (GND and IC Power) : About 25kΩ</td><td>Between 3-1 : open(∞ Ω) or between 2-1 : short (0 Ω)</td></tr></table> 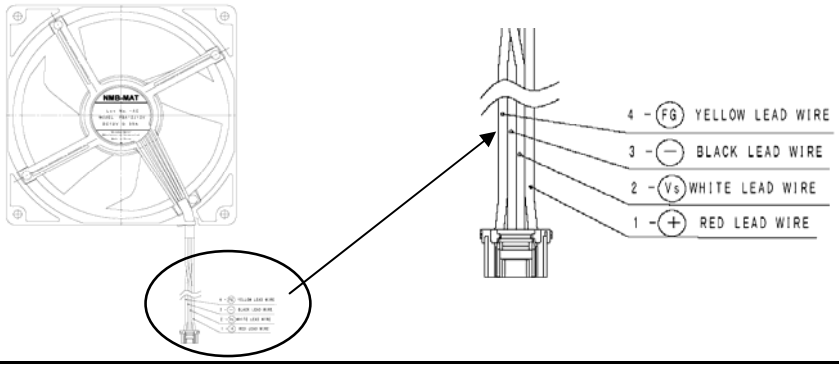	In fan grille of the freezer compartment.
Defrost Heater	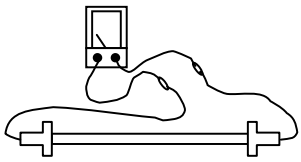 <table><tr><td>Rated input</td><td>150 W</td></tr><tr><td>Operation method</td><td>Power ON after defrosting (14 ± 1.5°C or more)</td></tr></table> Measure the resistance with a tester. (Ambient temperature:Room temperature 15°C ~ 25°C) <table><tr><th>Normal</th><th>Abnormal (faulty)</th></tr><tr><td>384Ω (Approx.)</td><td>Opened (∞ Ω)</td></tr></table>	In the drip tray under the evaporator of the freezer compartment
Thermistor	• Resistance measured under the ambient temperature from -50: to +50: 1. 200" to 500k" .....normal 2. Out of the above range .....abnormal 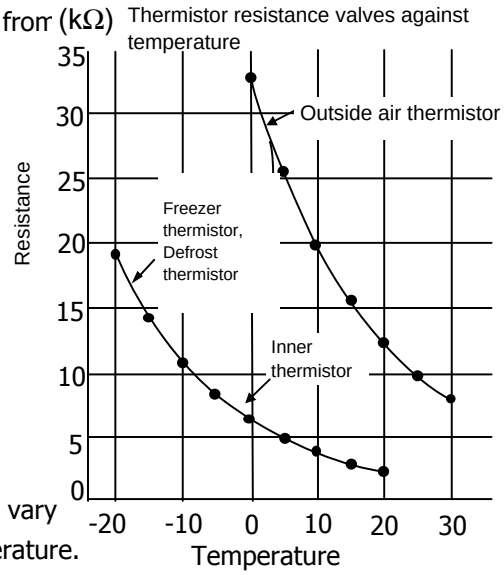 **Thermistor Check Procedure** ● Thermistor resistance will vary with the change of temperature. ● Take the temperature around the thermistor, and then measure resistance using a tester. The relation of resistance and temperature is as shown on the above graph.	Defrost thermistor at the muffler of evaporator in freezer compartment. Freezer thermistor at fan grille of freezer compartment. Out air thermistor under hinge cover

6.2 TEST POINT DIAGRAM OF MAIN CONTROL BOARD

MR-385C-A **MR-385CL-A** **MR-420C-A** **MR-455C-A**

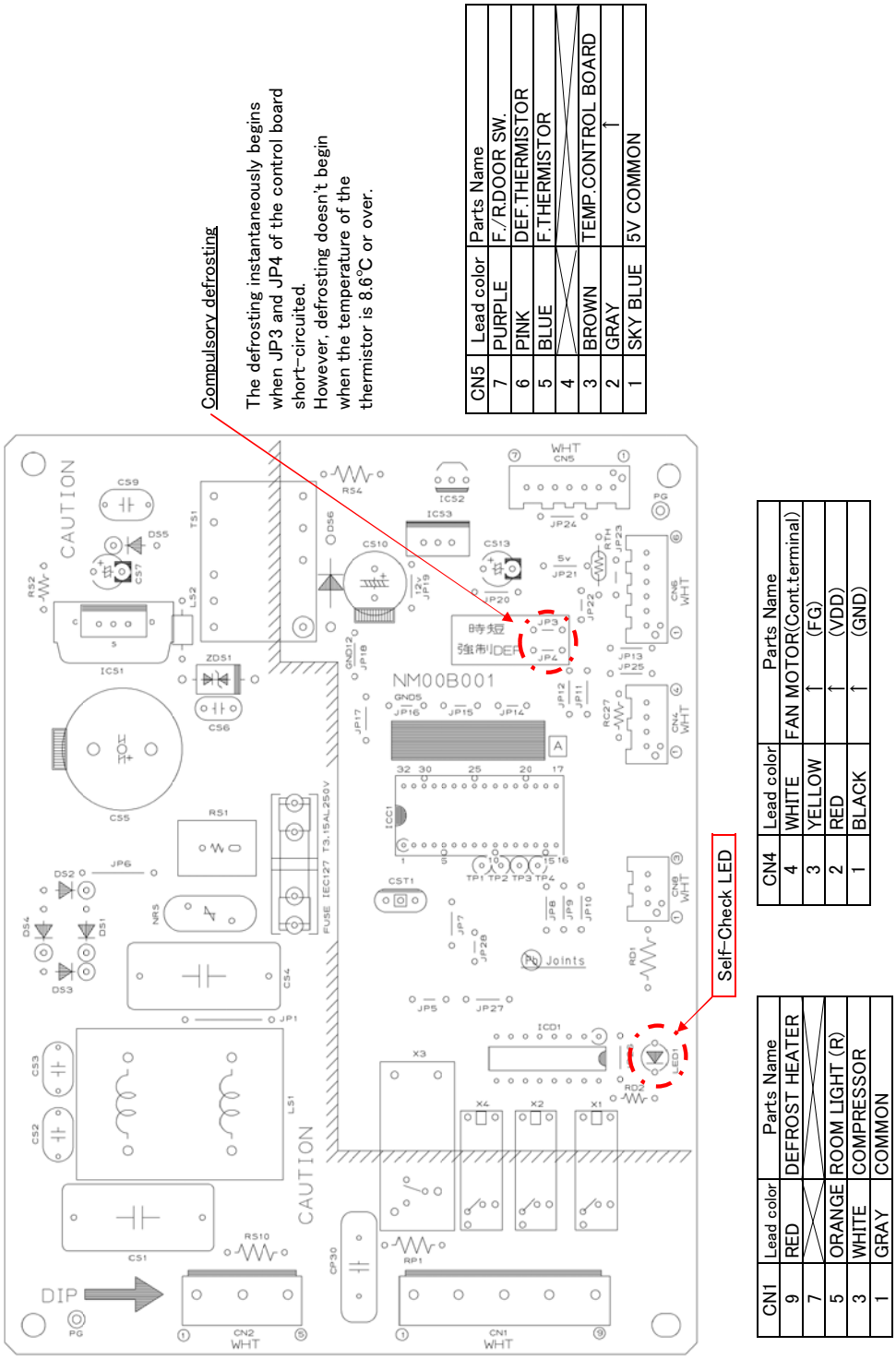

6.3 LED trouble display and check point.

6.3.1) Trouble is indicated by the blinking number of self-check LED.

6.3.2) LED blinks as shown below.

The blinking number of self-check LED specifies the trouble which has occurred.
LED repeats to blinks as many times as the number specified for each trouble under this cycle : lighted for 0.3 second/not lighted for 0.3 second.

(Example)Malfunction of defrsot thermistor

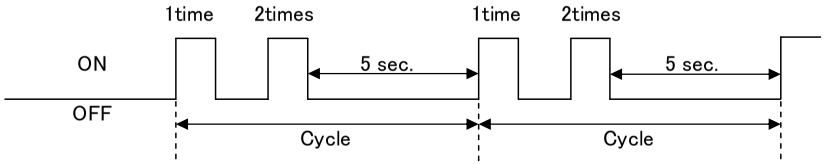

6.3.3) Check point and Repairing

※When several troubles occur,smaller blinking number LED has priority to be indicated first.

Function display				Cause	Analysis	Check point	Corrective	Priority Repairing
LED display self-check	Malfunction display	Lighting mode	1 time	Fault trouble of freezer thermistor	Open circuit or short circuit case	1.Check connector of control PCB CN5, relay connector 3 pin	Improve in contact	1
						2.Check the resistance of thermistor	Change part	
			2 times	Fault trouble of defrost thermistor	Open circuit or short circuit case	1.Check connector of control PCB CN5, relay connector 2 pin	Improve in contact	2
						2.Check the resistance of thermistor	Change part	
			3 times	Fault trouble of defrost heater	Defrost unfinished with in 2 hours	1.Check connector of control PCB CN1, relay connector 3 pin and temp. fuse	Improve in contact	3
						2.Check the resistance of defrost heater	Change part	
						3.Check the resistance of temp. fuse	Change part	
			10 times	Fault trouble of fan motor	Don't rolling case	1.Check connector of control PCB CN4, relay connector 4 pin	Improve in contact	4
						2.Check the movement of fan motor	Change part	
			16 times	Fault trouble of Memory (Control Board)	Out of control case	———————————	Change Control Board	5

Caution

1.Before plug in the AC power, Be ensure the comp had been off more than 20 min.

2.The consider short circuit or open circuit of thermistor, resistance of open circuit is ∞ Ω, resistance of short circuit is 0 Ω.

6.4 Importance detail of fault analysis

Flow chart of self - check

1) Self - check monitor circuit

For show the fault condition of refrigerator and clarify point. Therefore, self - check monitor control is provided that are able to monitor No. of blinking condition with electric circuit and electric part . Before disconnect power plug please confirm LED self - check .

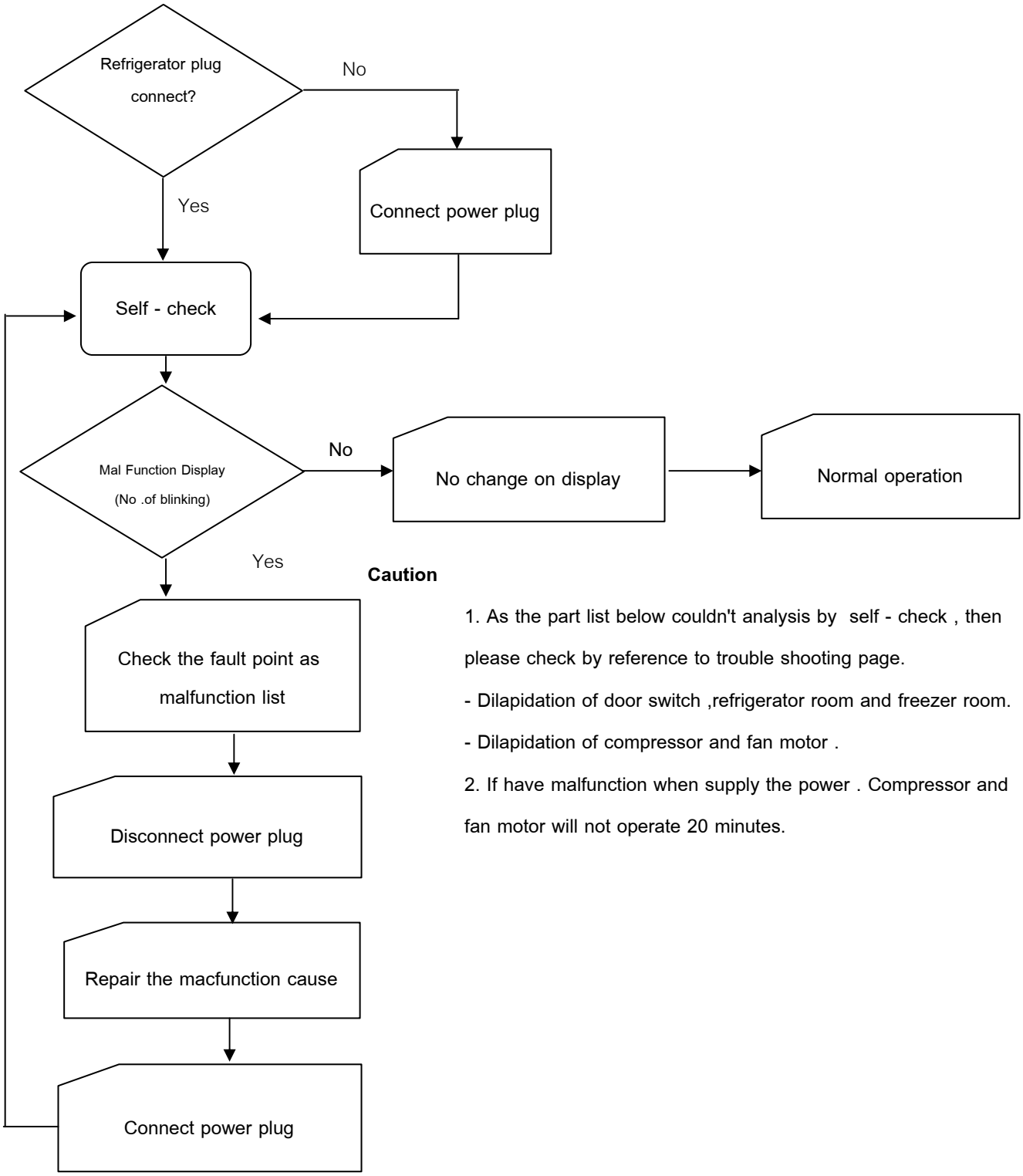

Caution

1. As the part list below couldn't analysis by self - check , then please check by reference to trouble shooting page.
   - Dilapidation of door switch ,refrigerator room and freezer room.
   - Dilapidation of compressor and fan motor .
2. If have malfunction when supply the power . Compressor and fan motor will not operate 20 minutes.

2) Interval of self check analysis

- Troubles of thermistor : will check always.
- Trouble of defrost heater : will just analyse during defrost display only.

(The period checking will analyse the defrost circuit after connect the plug 2 hours)

7 DISASSEMBLY INSTRUCTIONS

MR-385C-A MR-385CL-A MR-420C-A MR-455C-A

● Unplug the power cord before repairing and servicing

OPERATING PROCEDURE	PHOTOS
1. Remove parts insider the Freezer room (1) Photo 1st Remove Crystal shelf Freezer, Ice corner tray assy, Ice tray, Ice box **Fan Grille** (2) Photo 2nd Remove screws for closing Lead cover F, Remove 2 Rivets From Fan grille (3) Photo 3rd Cut binder, remove poly bag, Take off connector lead wire. **Bell mouth** (4) Unhook the catches of the fan grille and the bell mouth, and separate the fan grille and the bell mouth. (See photo 4th.) **Fan motor** (5) Photo 4th Remove Fan motor after separated the fan grille and the bell mouth from bell mouth **Defrost thermal fuse and Freezer thermistor** (6) Photo 4th remove the connector and plug to take out the thermal fuse and thermistor freezer.After separated the fan grille and the bell mouth **Defrost heater and Drip tray** (7) Photo 5th Lift up evaporator and remove the defrost heater out of base after remove heater cover plate and drip tray **Caution on assembly** 1. Insert the fan into the base of fan motor's shaft, check if the fan rotates with your finger. 2. When inserted drip tray to effect to slacken the lead wire of defrost heater in order to prevent water from entering the glass tube. 3. Attach defrost thermistor with muffler and tighten the binder.	Photo 1 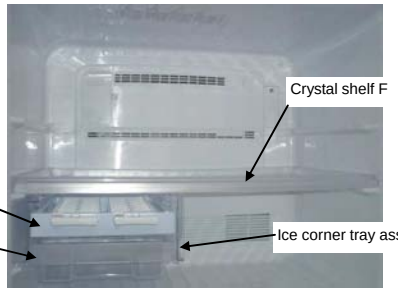 Photo 2 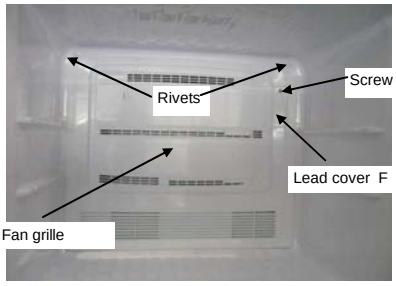 Photo 3 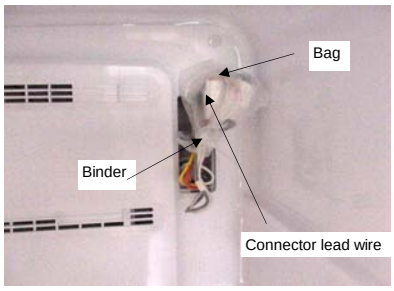 Photo 4 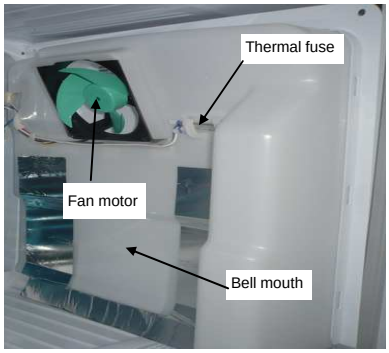 Photo 5 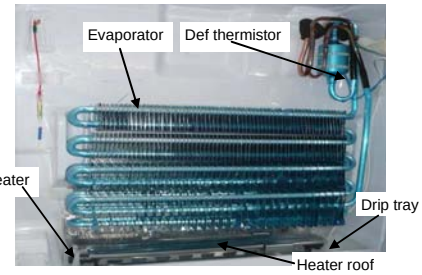

OPERATING PROCEDURE	PHOTOS

2. Remove parts inside the refrigerator

(1) Remove chilled case door and slide chilled case , remove glass shelves of refrigerator room , remove the control panel

(Photo 6)

(2) Remove lamp cover R

(Photo 6)

(3) Remove screw and rivet , pull the control panel with to right refrigerator wall.

(Photo 6)

(4) Remove duct R assy, damper thermo is installed within it.

(Photo 7)

Remove the screw of damper thermo

3. Remove the electric box cover

(1) Take out screw (2 points) as photo 8

(2) Take out screw (2 points)at left side and right side of electric box cover ,then pull the electric box cover as photo 9.

Caution on assembly

1. Be sure to use new sealing materials and tape for assembly.

2. Attach the sealing material of PC board and attach the aluminium tape every times for protective moisture.

3. Must put connector which contact must touch together as photo 10.

Photo 6

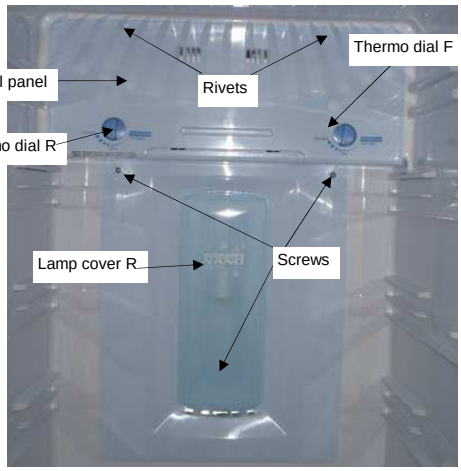

Photo 7

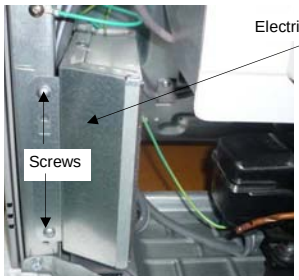

Photo 8

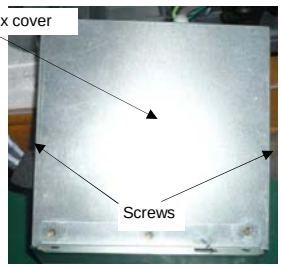

Photo 9

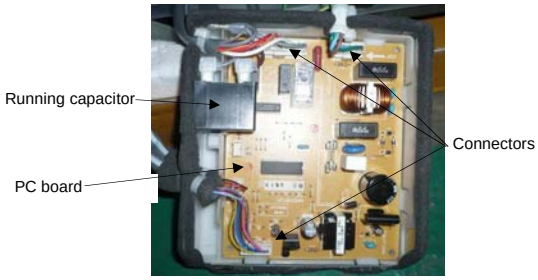

Photo 10

OPERATING PROCEDURE

4. Removing the compressor

(1) Detach the drain pan.

Compressor

(2) Collect gas from the charge pipe on the high pressure side.

(3) After collecting gas, cut the charge pipe on the low pressure side.

(4) Detach the welded section of the discharge pipe and suction pipe

(5) Replace the compressor and the dryer at a time. (The dryer should be the one packed with the compressor.)

CAUTION ON ASSEMBLY

After replacing the compressor be sure to evacuate the refrigerating cycle and charge gas into the charge pipe.

After replacement check cooling operation and check the weld for gas leaking.

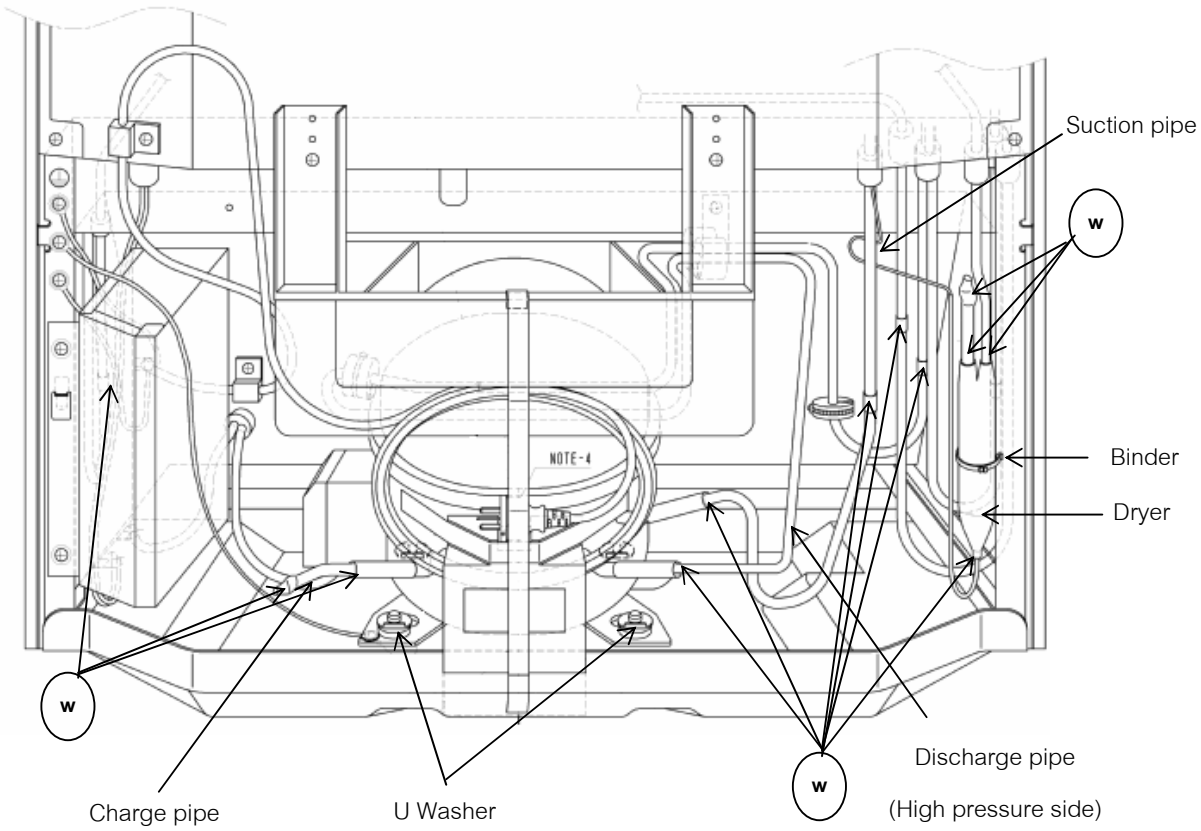

w : This mark shows welding point.

8 PARTS LIST

DOOR, BODY PARTS

MR-385C-A
MR-385CL-A
MR-420C-A

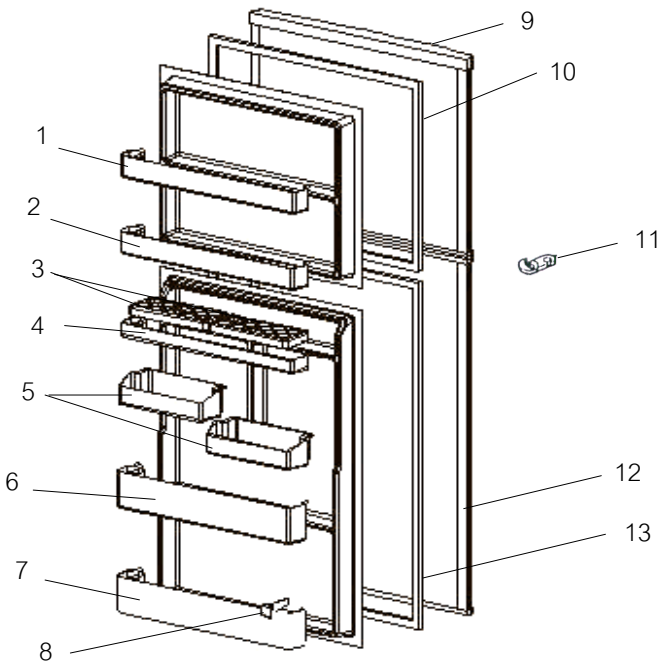

MR-455C-A

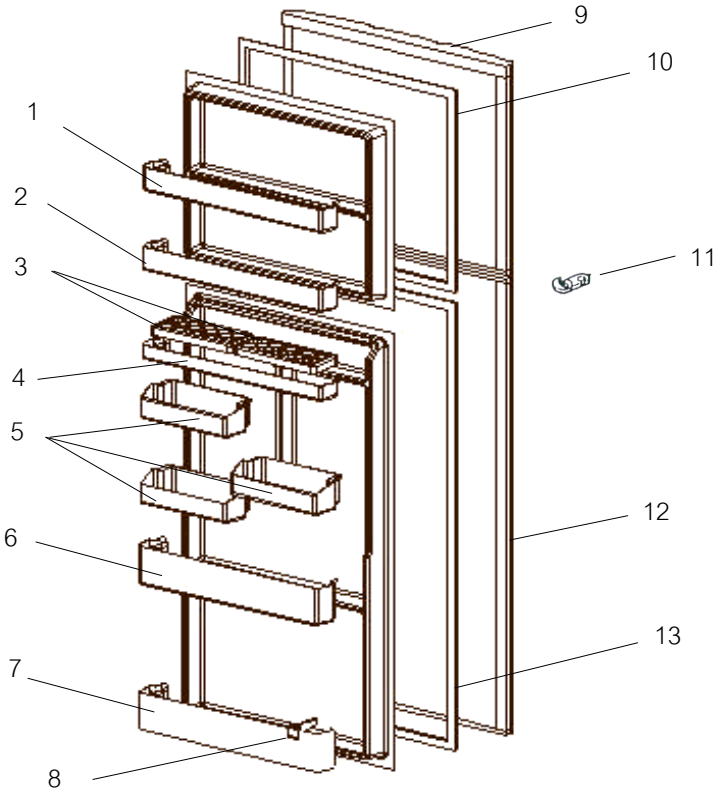

NO.	PART NO.	RoHS	PART NAME	SPEC	Q'TY/UNIT								PRICE/PIECE(US$-FOB)
					MR-385C-A		MR-385CL-A		MR-420C-A		MR-455C-A		
					W	ST	W	ST	W	ST	W	ST	
1	KIEL75131	<G>	FREEZER POCKET PRINT		1	1	1	1	1	1	1	1	
2	KIEL76131	<G>	FREEZER POCKET		1	1	1	1	1	1	1	1	
3	KIE401115	<G>	EGG RACK		2	2	2	2	2	2	2	2	
4	KIEL75118	<G>	FREE POCKET		1	1	1	1	1	1	1	1	
5	KIEL75159	<G>	ADJUST POCKET		2	2	2	2	2	2	3	3	
6	KIEL75124	<G>	BOTTLE POCKET PRINT		1	1	1	1	1	1	1	1	
7	KIEL76124	<G>	BOTTLE POCKET		1	1	1	1	1	1	1	1	
8	KIEH88143	<G>	BOTTLE STOPPER		1	1	1	1	1	1	1	1	
9	KIERM0001	<G>	DOOR F		1				1		1		
	KIER74001	<G>				1				1		1	
	KIERM2001	<G>					1						
	KIERM3001	<G>						1					
10	KIEH79111	<G>	MAGNET GASKET ASSY (F)		1	1	1	1	1	1	1	1	
11	KIEG05741	<G>	CATCHER RH		1	1			1	1	1	1	
	KIEPE4741	<G>	CATCHER LH				1	1					
12	KIEM98000	<G>	DOOR R		1								
	KIEM73000	<G>				1							
	KIEMA0000	<G>					1						
	KIEMA1000	<G>						1					
	KIEMA2000	<G>							1				
	KIEM77000	<G>								1			
	KIEMA4000	<G>									1		
	KIEM80000	<G>										1	
13	KIEH79110	<G>	MAGNET GASKET ASSY (R)		1	1	1	1					
	KIEH82110	<G>							1	1			
	KIEH85110	<G>									1	1	
14	KIERN0031	<G>	BADGE ASSY		1		1		1		1		
	KIER72031	<G>				1		1		1		1	

RECOMMEND PART NO. 9, 10, 12, 13

ABBREVIATION

F	FREEZER ROOM
R	REFRIGERATOR ROOM

ENCIRCLED PART NUMBER ARE NOT SHOWN IN THE FIGURES.

Remark

- Country code : A= Australia and New Zealand
- Colour code : W = White, ST = Stainless

ACCESSORY PARTS

MR-385C-A

MR-385CL-A

MR-420C-A

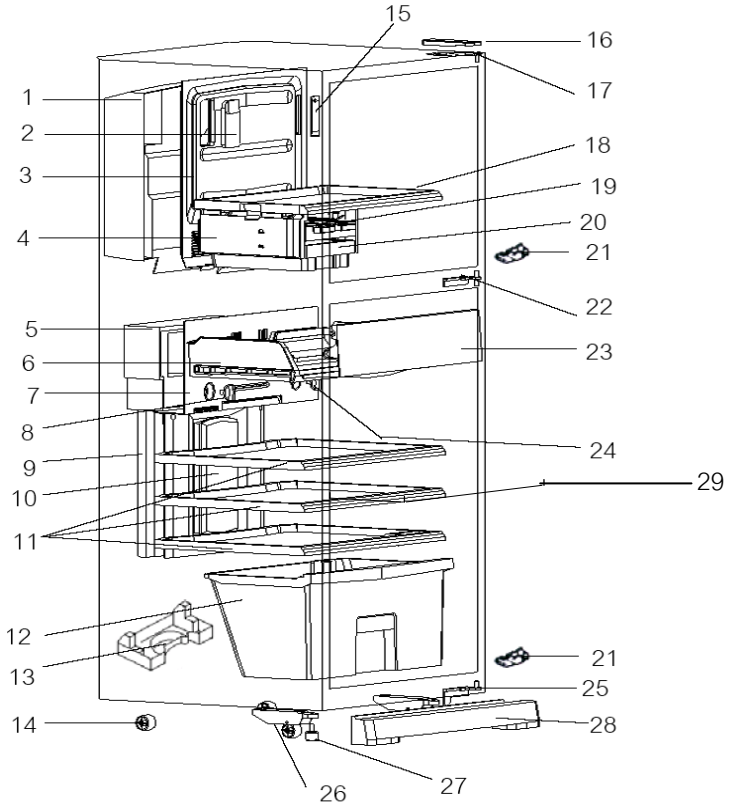

MR-455C-A

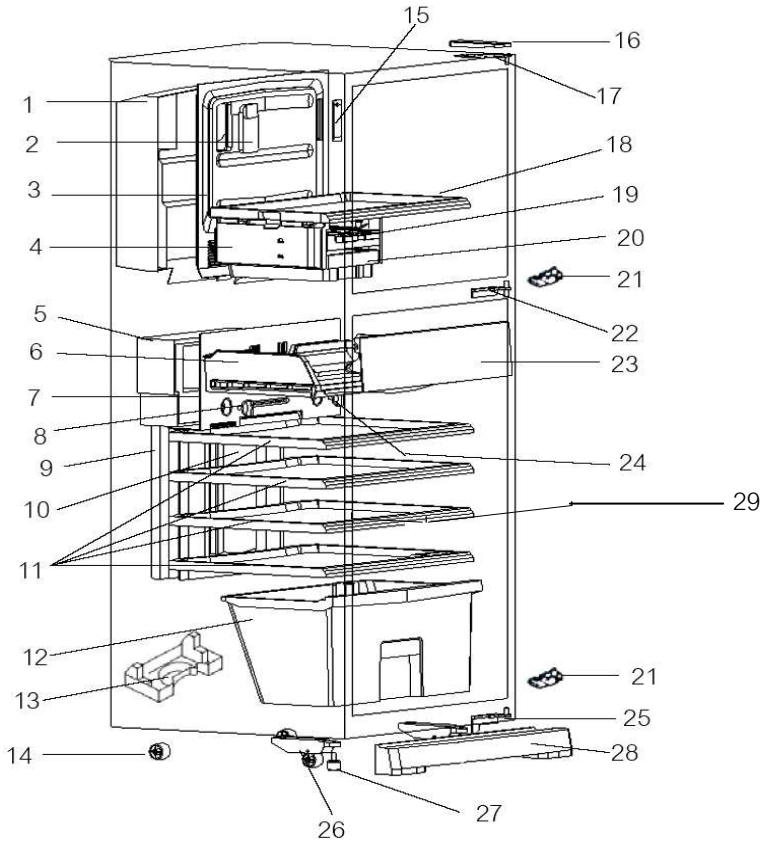

NO.	PART NO.	RoHS	PART NAME	SPEC	Q'TY/UNIT								PRICE/PIECE(US$-FOB)
					MR-385C-A		MR-385CL-A		MR-420C-A		MR-455C-A		
					W	ST	W	ST	W	ST	W	ST	
1	KIEMQ4662	<G>	BELL MOUTH		1	1	1	1	1	1	1	1	
2	KIEL75473	<G>	LAMP COVER (F)		1	1	1	1	1	1	1	1	
3	KIEH79663	<G>	FAN GRILLE		1	1	1	1	1	1	1	1	
4	KIEH79450	<G>	ICE CORNER ASSY		1	1	1	1	1	1	1	1	
5	KIEL75665	<G>	DUCT R ASSY		1	1	1	1					
	KIEL79665	<G>							1	1			
	KIEL82665	<G>									1	1	
6	KIEL75411	<G>	SLIDE CHILLED CASE		1	1	1	1	1	1	1	1	
7	KIEM98850	<G>	CONTROL PANEL		1	1	1	1	1	1	1	1	
8	KIEH79305	<G>	THERMO DIAL (R)		1	1	1	1	1	1			
	KIEK67305	<G>									1	1	
9	KIEL75853	<G>	CONTROL PANEL (SUB)		1	1	1	1					
	KIEL79853	<G>							1	1			
	KIEL82853	<G>									1	1	
10	KIEL75470	<G>	LAMP COVER (R)		1	1	1	1					
	KIEL79470	<G>							1	1	1	1	
11	KIEK66430	<G>	GLASS SHELF (R)		3	3	3	3	3	3	4	4	
12	KIEL75405	<G>	VEGETABLE CASE		1	1	1	1	1	1	1	1	
13	KIEH79435	<G>	DRAIN PAN		1	1	1	1	1	1	1	1	
14	KIE805794	<G>	CASTER SET		2	2	2	2	2	2	2	2	
15	KIEH79326	<G>	LEAD COVER F		1	1	1	1	1	1	1	1	
16	KIEHA5705	<G>	HINGE COVER		1				1		1		
	KIEH89705	<G>				1				1		1	
	KIERM2705	<G>					1						
	KIERM3705	<G>						1					
17	KIEE94701	<G>	HINGE ASSY (UPPER)		1	1			1	1	1	1	
	KIEEA3701	<G>					1	1					
18	KIEH79431	<G>	CRYSTAL SHELF (F)		1	1	1	1	1	1	1	1	
19	KIEL75440	<G>	ICE TRAY		1	1	1	1	1	1	1	1	
20	KIEH79467	<G>	ICE BOX		1	1	1	1	1	1	1	1	
21	KIEE94746	<G>	STOPPER HINGE		2	2			2	2	2	2	
	KIEEA3746	<G>					2	2					
22	KIEMQ4703	<G>	HINGE ASSY (MIDDLE)		1	1			1	1	1	1	
	KIEMA0703	<G>					1	1					
23	KIEL75418	<G>	CHILLED CASE DOOR		1	1	1	1	1	1	1	1	
24	KIEH79315	<G>	THERMO DIAL (F)		1	1	1	1	1	1	1	1	
25	KIEL75702	<G>	HINGE ASSY (LOWER)		1	1			1	1	1	1	
	KIEMA0702	<G>					1	1					
26	KIEH79795	<G>	CASTER ASSY		2	2	2	2	2	2	2	2	
27	KIEC02460	<G>	ADJUST BOLT		2	2	2	2	2	2	2	2	
28	KIEJ81730	<G>	KICK PLATE		1				1		1		
	KIEJ82730	<G>				1				1		1	
	KIEJ93730	<G>					1						
	KIEJ94730	<G>						1					
29	KIEK88468	<G>	TRAY V		1	1	1	1	1	1	1	1	

RECOMMEND PART NO. 6, 8 ,11, 12, 18, 19, 20

ABBREVIATION

F	FREEZER ROOM	V	BETWEEN REFRIGERATOR ROOM AND VEGETABLE ROOM
R	REFRIGERATOR ROOM		

ELECTRICIAL PARTS AND UNIT PARTS

MR-385C-A

MR-385CL-A

MR-420C-A

MR-455C-A

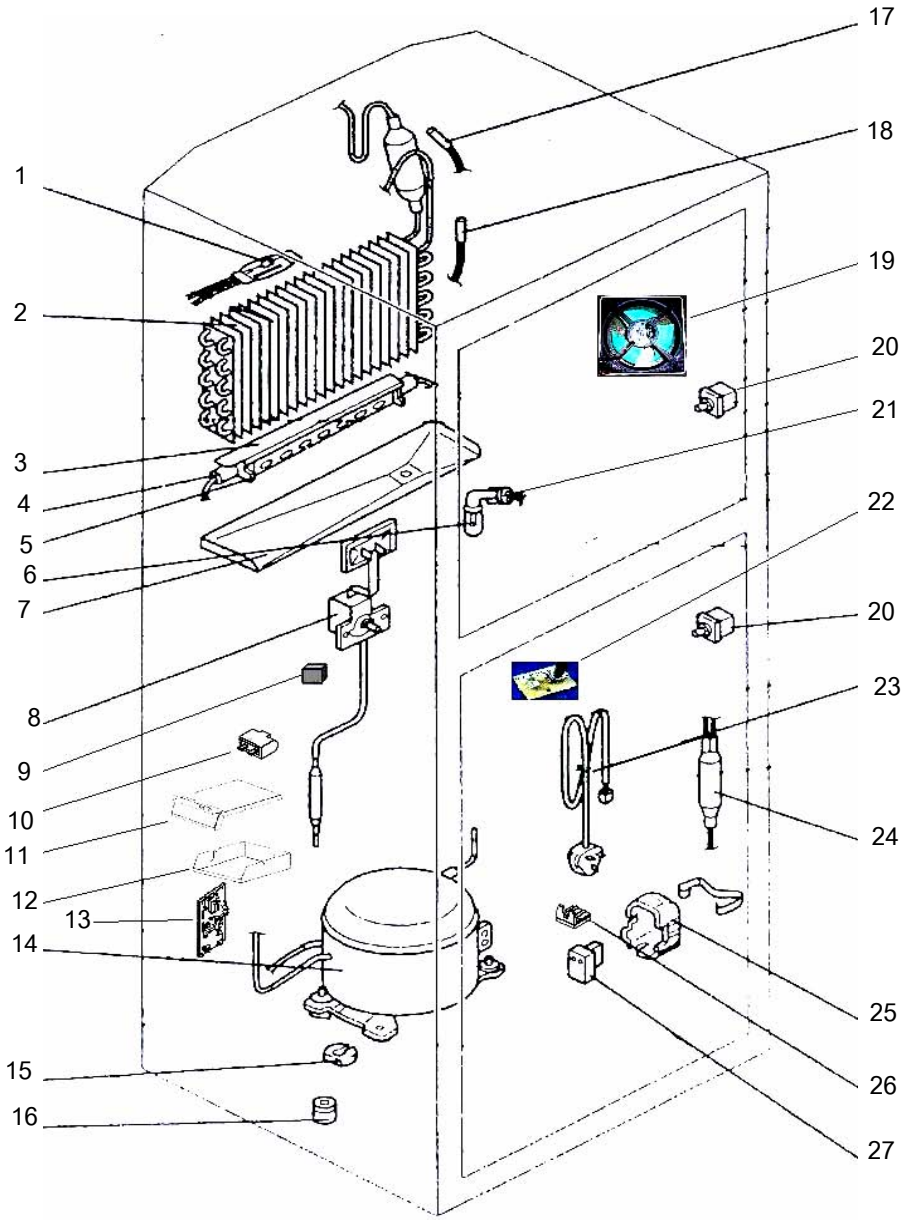

NO.	PART NO.	RoHS	PART NAME	SPEC	Q'TY/UNIT								PRICE/PIECE(US$-FOB)
					MR-385C-A		MR-385CL-A		MR-420C-A		MR-455C-A		
					W	ST	W	ST	W	ST	W	ST	
1	KIENF2336	<G>	THERMAL FUSE (DEF)		1	1	1	1	1	1	1	1	
2	KIEMQ4995	<G>	EVAPORATOR		1	1	1	1	1	1	1	1	
3	KIEH79537	<G>	HEATER ROOF		1	1	1	1	1	1	1	1	
4	KIEHM2392	<G>	DEFROST HEATER ASSY	240V, 150W NOT DEODORIZER	1	1	1	1	1	1	1	1	
5	KIEB66397	<G>	HEATER COVER		1	1	1	1	1	1	1	1	
6	KIE402360	<G>	LAMP	E12 240V 15W	1	1	1	1	1	1	1	1	
7	KIEH79538	<G>	DRIP TRAY		1	1	1	1	1	1	1	1	
8	KIEH79301	<G>	DAMPER THERMO	MM1-6177	1	1	1	1	1	1	1	1	
9	KIEH61399	<G>	FILTER		1	1	1	1	1	1	1	1	
10	KIELR4346	<G>	RUNNING CAPACITOR	4μF 400VAC	1	1	1	1	1	1	1	1	
11	KIEM98326	<G>	ELECTRIC COVER BOX		1	1	1	1	1	1	1	1	
12	KIEMQ4326	<G>	ELECTRIC BOX		1	1	1	1	1	1	1	1	
13	KIERN0339	<G>	REFCON ASSY		1	1	1	1	1	1	1	1	
14	KIEPM7277	<G>	COMPRESSOR	DHS66C10RAW	1	1	1	1	1	1	1	1	
15	KIE902735	<G>	U WASHER		3	3	3	3	3	3	3	3	
16	KIEE76797	<G>	RUBBER MOUNT		4	4	4	4	4	4	4	4	
17	KIEMQ4312	<G>	THERMISTOR (DEF)		1	1	1	1	1	1	1	1	
18	KIEB66378	<G>	THERMISTOR (F)		1	1	1	1	1	1	1	1	
19	KIEMQ4320	<G>	FAN MOTOR		1	1	1	1	1	1	1	1	
20	KIEMQ4363	<G>	LAMP SWITCH		2	2	2	2	2	2	2	2	
21	KIEMQ4386	<G>	LAMP SOCKET(R)		1	1	1	1	1	1	1	1	
22	KIEM98382	<G>	TEMP CONTROL BOARD		1	1	1	1	1	1	1	1	
23	KIEM98354	<G>	PLUG CORD ASSY		1	1	1	1	1	1	1	1	
24	KIEAA1980	<G>	DRYER	4AXH-9,10GR	1	1	1	1	1	1	1	1	
25	KIERL4341	<G>	PROTECTOR COVER		1	1	1	1	1	1	1	1	
26	KIEMR7340	<G>	MOTOR PROTECTOR	5TM222NFBYY-53	1	1	1	1	1	1	1	1	
27	KIEE76330	<G>	PTC RELAY	PTH7M330MD2	1	1	1	1	1	1	1	1	

RECOMMEND PART NO. 1, 4, 6, 8, 10, 13, 17, 18, 20, 24, 26, 27

ABBREVIATION

F	FREEZER ROOM	DEF	DEFROST
R	REFRIGERATOR ROOM		

PACKING PARTS

MR-385C-A

MR-385CL-A

MR-420C-A

MR-455C-A

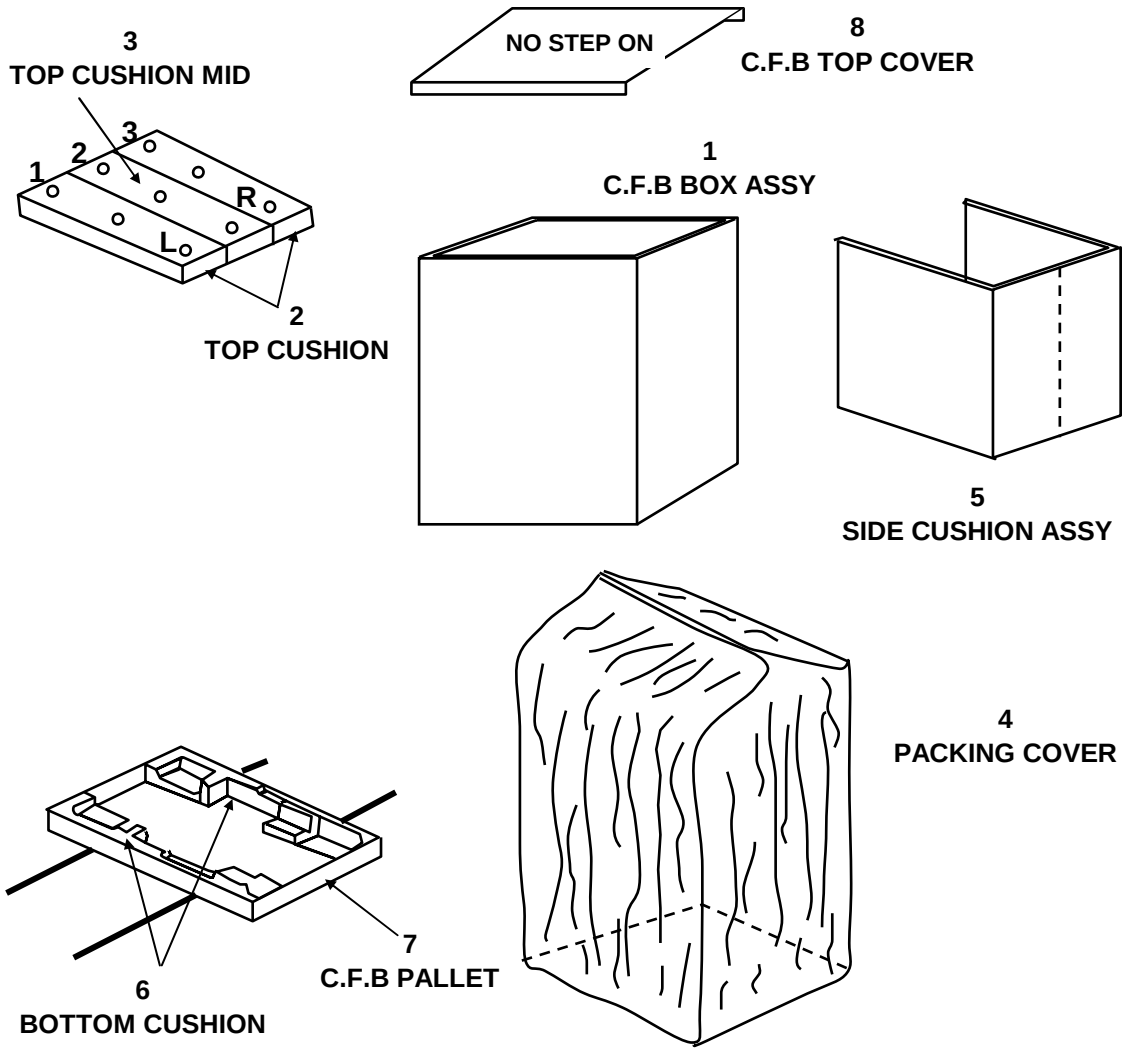

NO.	PART NO.	RoHS	PART NAME	SPEC	Q'TY/UNIT								PRICE/PIECE (US$-FOB)
					MR-385C-A		MR-385CL-A		MR-420C-A		MR-455C-A		
					W	ST	W	ST	W	ST	W	ST	
1	KIERM0970	<G>	C.F.B BOX ASSY		1								
	KIERM1970	<G>				1							
	KIERM2970	<G>					1						
	KIERM3970	<G>						1					
	KIERM6970	<G>							1				
	KIERM7970	<G>								1			
	KIERM8970	<G>									1		
	KIERM9970	<G>										1	
2	KIEL75979	<G>	TOP CUSHION		1	1	1	1	1	1	1	1	
3	KIEH79972	<G>	TOP CUSHION MID		1	1	1	1	1	1	1	1	
4	KIEG55973	<G>	PACKING COVER		1	1	1	1	1	1	1	1	
5	KIEJ81971	<G>	SIDE CUSHION ASSY		1	1	1	1	1	1	1	1	
6	KIEH79978	<G>	BOTTOM CUSHION		1	1	1	1	1	1	1	1	
7	KIEH79974	<G>	C.F.B PALLET		1	1	1	1	1	1	1	1	
8	KIEH79975	<G>	C.F.B TOP COVER		1	1	1	1	1	1	1	1	

MITSUBISHI ELECTRIC CORPORATATION

HEAD OFFICE : MITSUBISHI DENKI BLDG., MARUNOUCHI,TOKYO 100. TELEX : J24532 CABLE MELCO TOKYO

Distributed by

MITSUBISHI ELECTRIC AUSTRALIA PTY LTD.

(Incorporated in New South Wales) ABN 58 001 215 792

New South Wales :
348 Victoria Road,
Rydalmere NSW 2116
Ph : (02) 9684 7777
Fax : (02) 9898 1043

Queensland:
Unit 12, 469
Nudgee Road,
Hendra QLD , 4011
Ph : (07) 3263 2000
Fax : (07) 3630 1888

South Australia /
Northern territory :
Suite 1, 224 Glen Osmond Road
FULLARTON SA 5063
Ph: (08) 8338 1001
Fax : (08) 8338 0501

Western Australia :
329 Collier Road,
Bassendean WA 6054
Ph : (08) 9377 3400
Fax : (08) 9377 3499

Victoria / Tasmania :
Building 28, Omnico bus. Park
270 Ferntree Gully Road,
Notting Hill 3168
Ph : (03) 9535 7800
Fax : (03) 9535 7801

Far North
Queensland:
Capricorn Air,
13 Mackley St,
Garbutt 4814
Ph: (07) 4775 5222
Fax : (07) 4775 5303

Distributed by

BLACK DIAMOND TECHNOLOGIES LIMITED (BDT)

Wellington Office (Head Office)
1 Parliament Street
PO Box 30-772
Lower Hutt
Ph : (04) 560 9100
Fax : (04) 560 9133

Auckland Office
Unit1, 4 Walls Road
Penrose
Auckland PO Box 12-726
Ph: (09) 526 9340
Fax : (09) 526 9369

Christchurch Office
Suite 2, Level 1
37 Manderville Street
Christchurch PO Box 1604
Ph : (03) 341 7052
Fax : (03) 341 7054